INSTALLATION MANUAL

TABLE OF CONTENTS

01 Installation instruction

1.Installation Requirement 01

2.Installation 02

02 Testing

1.Testing 08

2.Parameter Description 09

03 Troubleshooting and Maintenance

1.Troubleshooting 12

2.Note 13

01

Installation instruction

Installation Requirement

1、 The ground surface where the gate is installed should be level;

2、The concrete grade >= C30 (For outdoor installation);

3、Concrete thickness>=200mm;

4、The ground must be frost-free and have good bearing capacity;

5、The turnstile must be grounded;

6、The power cord should be no less than RVV3*2.0;

7、When installing, make sure the body is horizontal and the turning bar is vertical.

Installation

According to the channel requirements, place the equipment in good condition, ensuring that both ends of the equipment are level and the channel width is consistent



Mark the fixed hole position

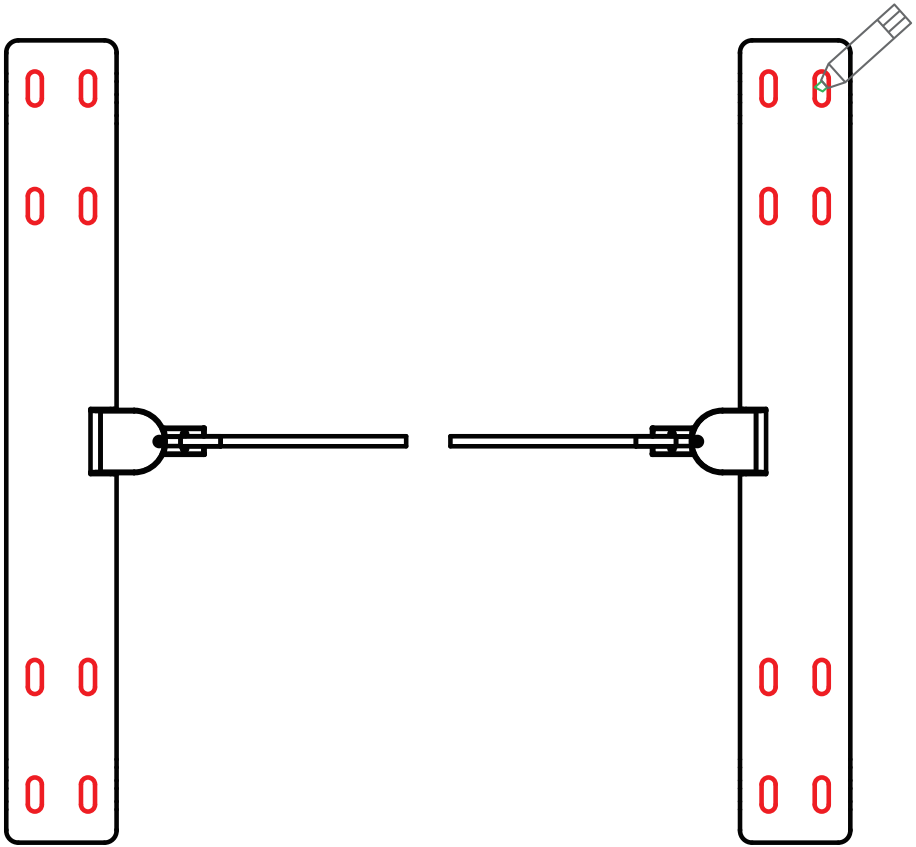

Move the device away and embed M12 * 100 expansion screws according tothe marked hole positions

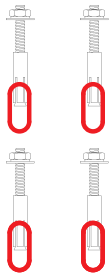

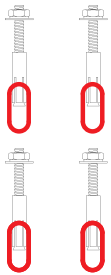

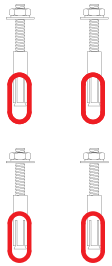

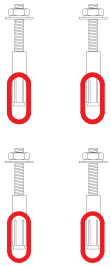

Buried wires according to wiring diagram ahead of time

(Note: This device only needs power cords. If other access control equipment is installed, wiring can be done according to actual conditions.)

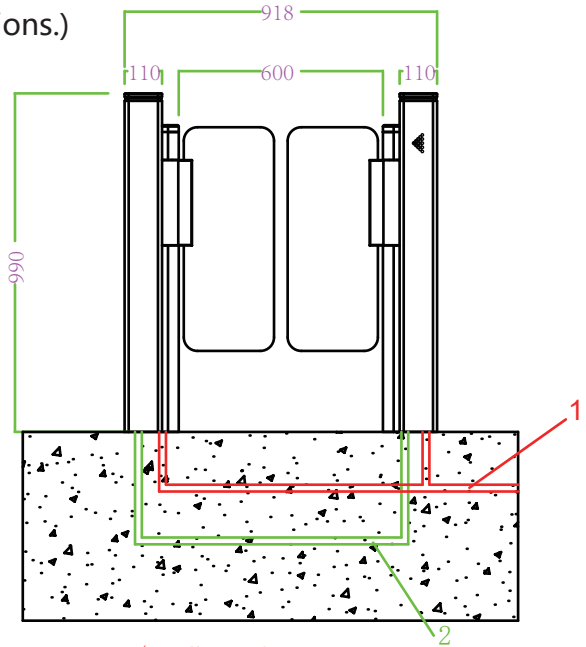

Installation Manual:

1 The Ø20mm PVC tube for AC 220V Power wires(3 X Ø2.0mm).

2 The tube for connecting vice-machine to master machine in the same lane (CAT5 network cables*2PCS, 2 * 1.0mm Power wires*1PCS) .

3 TCP/IP ethernet cable for connecting access device to PC.

4 1.Master servo motor driver ,2 .Vice- servo motor driver.

5 Fixing the equipment with M12 X 100mm expansive bolt .

Mark:All wires extending out of the ground shall be no less than 2M.

Turnatile installation and fixation

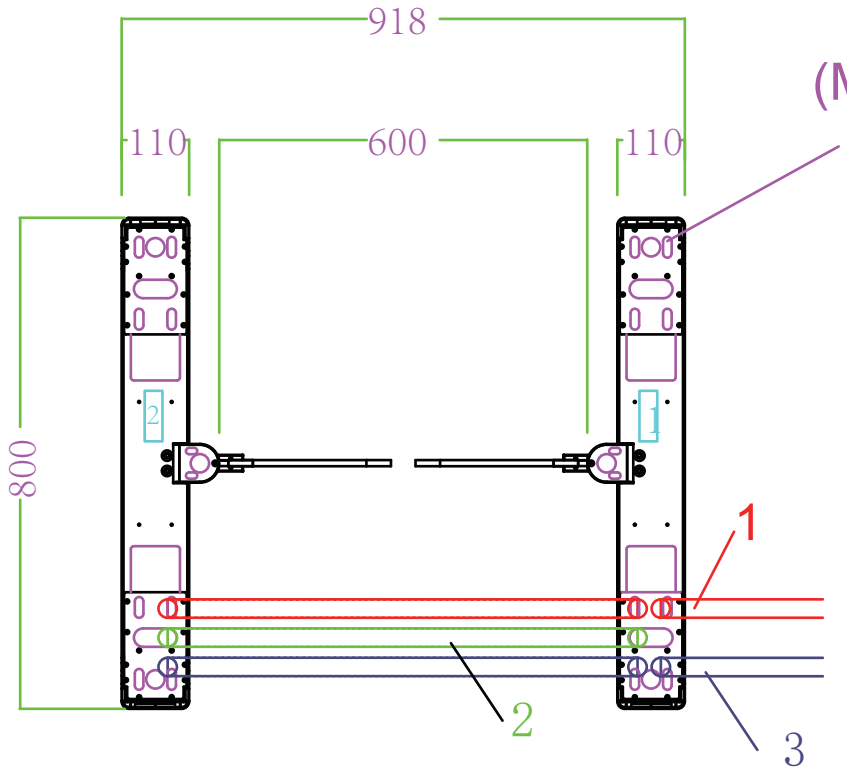

(M12X100mm expansive bolt)

Wiring diagram

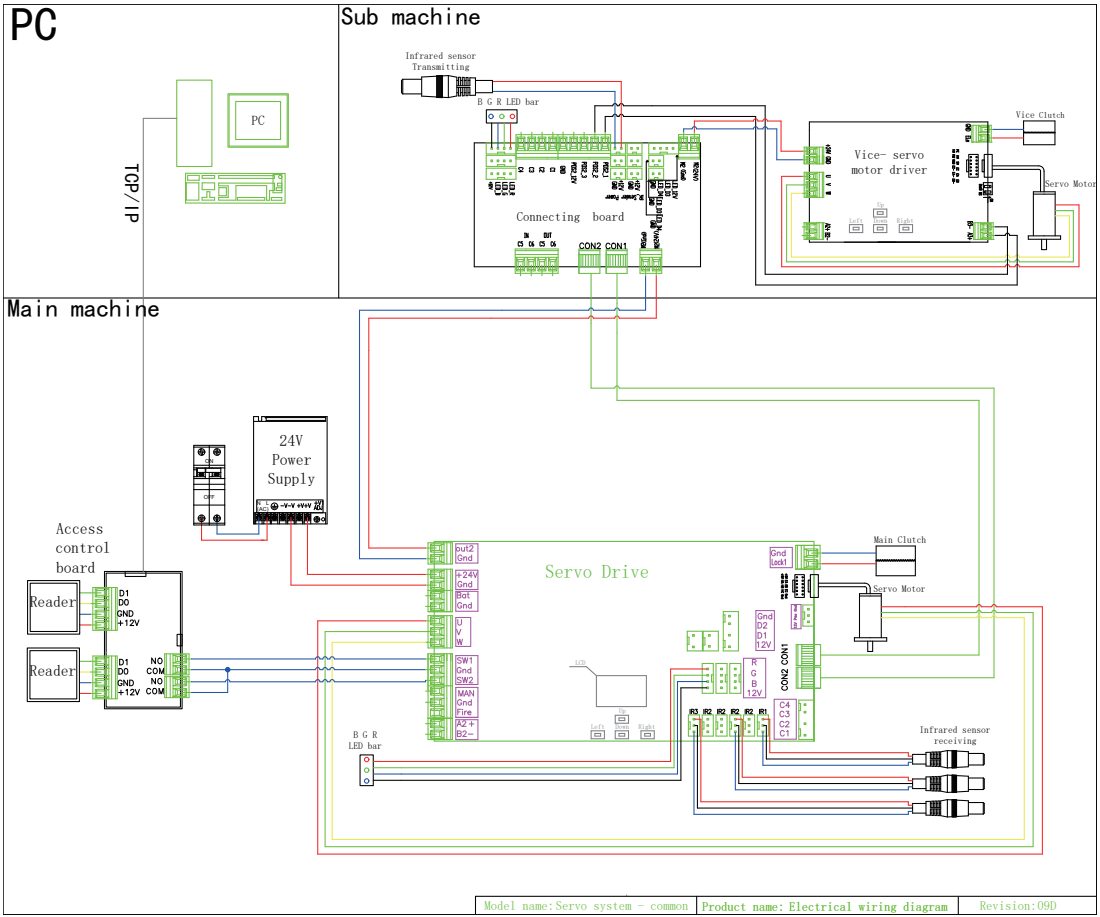

02

Testing

Testing

1. Check the wiring: According to the wiring diagram, check whether the online and power lines of the gate are connected correctly. Only after confirming that they are correct can the power be turned on. If there are any abnormalities during the power on process Always disconnect the power and check the connecting wires first.
2. Function debugging: After power on, the gate is opened and closed, then opened and finally closed. This process is a machine self-test, and the self-test is completed after two beeps of two seconds. Do not block the infrared during the process and do not stand in the channel.
3. Enter the lines without swiping card, the turnstile will always alarm; if no alarm, please check if the infrared sensors are aligned. When they are aligned, the infrared receiver lights up red; When they are not aligned, and then the infrared receiver will not light up red, please adjust and align the infrared sensors.
4. The unlocking time of the access control relay should be set to 0 seconds or 1 second;
5. When flashing a valid card, the indicator light turns into a green arrow. If the direction indicated by the indicator light is incorrect or if the entrance gate is closed immediately and an alarm is triggered, switch to SW1 Simply swap the Gnd and SW2 Gnd wiring.
6. Carefully inspect and test to ensure that there are no abnormalities in the door opening and closing, the indicator lights are correct, and the infrared anti pinch function is normal before putting it into use.

Parameter Description

menu	illustrate
1. Parameters	
1.1 Counter	Display pass through count
1.2 Gate Mode	Set gate mode(NO, NC and card, free or reject) of enter and exit : 1.NC, Both Card (default)
1.3 Pass Time Out	Set maximum waiting time 10-255, unit 0.1s, default 5 seconds
1.4 Memory	Set Scan Card With Memory Mode: default both disable
1.5 Read In Lane	Set Can Scan Card After Entry Lane,Please do not modify: default not allow
1.6 Open Delay	Set Authorized Open Door Delay 0-255, unit 0.1s, (default 0)
1.7 Close Delay	Set Close Door Delay After Passage Finish0-255, unit0.1s, (default 0)
1.8 MIN Speed	Set the power-on self-check speed of the gate, the smaller the value, the slower the speed
1.9 Open Speed	Set the gate opening and closing speed, the smaller the value, the faster the speed
1.10 Pass End	Set IR Check passage end position: 1. exit (default), 2. safety
1.11 Intrude Set	Set Intrude Alarm Mode : 1.none, 2 .alarm (default), 3. alarm and close
1.12 Reverse Set	Set Passage From Reverse Alarm Mode : 1 none, 2. alarm (default), 3 alarm and close
1.13 Tail-Gating	Set Tail-Gating Alarm Mode : 1 none, 2. alarm (default), 3 alarm and close
1.14 Entry-Voice	Not enabled
1.15 Exit -Voice	Not enabled
1.16 Alarm-Voice	Not enabled

1.17 Adv. Param.	
.1 Motor Type	Set motor type : 1.TB 2.LS 3.HBL
.2 KP	Ring speed value
.3 KI	Ring cache value
.4 Motor Potection	Set motor over current protection threshold: default 13.0A
.5 Entry Angle	Set turnstile door opening angle for Entry
.6 Exit Angle	Set turnstile door opening angle for Exit
.7 Output Test	Not enabled
.8 Lock Open	Set clutch : 1.Not Allow, 2.Allowed
.9 Save Factory Settings	Save the current parameter to factory default
.10 Relay Mode	Set add relay use for passed counter: default none
.11 Auto Report	Set automatic report gate status when on change: default disabled
.12 Motor Direction	Set direction of motor rotation : 1. DIR_ON, 2. DIR_REV
.13 NO Direction	Set the normally open the gate opening direction: default entry
.14 Power Lost	Set the normally open the gate opening direction when Power failure: default enter
.15 Barriers	signal or double machine work: default double
.16 IR Logic	Set IR logic type: default inside
.17 LED Mode	Set LED directional indicator mode : 1) Static LED , 2) Small square LED
.18 Set Device Type	Set Controller Device Type : 1)Swing Barrier Gate 2)Flap Barrier Gate 3)Tripod Turnstile
2. System Set	
2.1 Language	Set menu display language
2.2 Device Type	Display controller device type

2.3 Version	Display hardware and firmware version information
2.4 Set Address	Set device logic address
2.5 SLE.Address	Not enabled
2.6 Master Flag	Not enabled
2.7 RS485 Baud Rate	Set baud rate of the RS485
2.8 Reset	Reset all setting to factory default
2.9 Restart	Restart controller
3. Factory Test	
3.1 Cycle Test	Open and close door cycle test
3.2 Set Zero	Set barrier close position

03

Troubleshooting and Maintenance

Troubleshooting

Basic concepts: Infrared radiation consists of a receiving end and a transmitting end. The green light at the tail of the transmitting end is always on, and the receiving end (with 3 wires, brown, 12V, blue, Gnd, black) When the signal line is unobstructed, the red light at the tail does not light up, and there is no voltage output between the black signal line and the blue line. When there is obstruction, the red light at the tail lights up, and the black signal。There is voltage output between the
number line and the blue line

Question	Solution
1、The indicator light is not on?	Switch to another test machine or use a good one to check the wiring.
2、There is one indicator light with wrong direction?	Swap the connection between D1 and D2 terminals of control board.
3、After swiping the card, one side of the door wing remains stationary?	Check if the wiring is loose; Power off and check if the connecting wires are properly connected; Check the electrical of the control board separately.The ports W, V, and U of the machine correspond one-to-one with the color of the line sequence
4、Open the gate upon entering the channel?	Change the two-way free access mode of the control panel menu to card swiping mode。
5、After swiping the card, enter the channel to sound an alarm and close the gate	Connect the opening signal to the two terminals of the anti adjustment control board, SW1 GND and SW2 GND。

Note

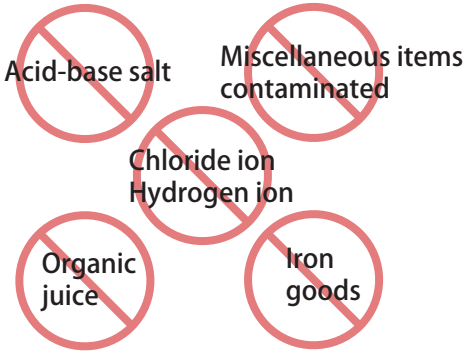

Why does 304 stainless steel rust?

Environmental factors can cause corrosion and rusting of stainless steel, especially the presence of hydrogen ions and chloride ions. For example, hydrogen ions and chloride ions are present in table salt/sweat/sea water/sea breeze/soil, etc. Stainless steel corrodes quickly in the presence of chloride ions, even more than ordinary low carbon steel. Therefore, there are requirements for the working environment of stainless steel, and it needs to be wiped frequently to remove dust and keep clean and dry.

Stainless Steel Turnstile Maintenance Manual

Dear Customer ,

Hello! Thank you for purchasing our company's products. Our company solemnly promises to customers that the pedestrian turnstile products you purchase are all made of high-end stainless steel 304. The sophisticated production technology is applied thoroughly all production process. With strict quality inspection, the product quality is assured. Affected by improper operation and climate environment, various components will inevitably become worn and cracked, resulting in rust and poor customer experiences. Therefore, we recommend that you give your products regular maintenance and keep your products new.

Type: Surface dust, chemical liquid, dirt and acid and alkaline substances

Solutions: Wash with wet soft non-woven cloth, then wipe clean, then scrub with alcohol, and then wipe the whole body of the turnstile with WD-40 rust remover;

Maintenance cycle: Weekly



Type: The surface has rainbow patterns or the surface color is dull

Solutions: Wash with wet soft cotton cloth, then wipe clean, then scrub with alcohol, and then wipe the whole body of the turnstile with WD-40 rust remover;

Maintenance cycle: Weekly



Type: Check the moving parts for abnormal noise or looseness

Solutions: Apply butter to the moving part

Maintenance cycle: Quarterly



Type: Check if fasteners are loose or not and circuits is abnormal or not

Solutions: If the fastener is loose, then fasten. If the circuit is abnormal, eliminate the problems.

Maintenance cycle: Annual



Maintenance tools and materials

1、Cleaner: Choose mild stainless steel cleaners and avoid using cleaners with acidic or alkaline ingredients.

2、Soft cloth or sponge: Spray cleaners on a soft cloth （or sponge） to clean the turnstile surface.

3、Water: wash surface dirt.

4、Drying cloth: wipe off surface moisture.

5、WD-40 Rust Remover: Remove rust caused by long-term exposure to corrosive environment.

6、 Lubrication: lubricate bearings, locking arms, transmission joint components.

Note：

1、 Avoid using cleaners with acidic or alkaline ingredients, which may make the surface rust.

2、Avoid using sharp or hard objects to scratch the turnstile surface, which will affect the appearance of the turnstile surface.

3、Keep surface dry，Avoid making the turnstile in moisture for a long time. Water stains will cause stainless steel to rust. If there are water stains on the surface, wipe clean immediately.

4、Regular inspection and maintenance，regularly check the turnstile surface condition to promptly find and resolve existing problems. If there are rust or scratches on the surface, please maintain or replace in time.