INSTALLATION MANUAL

TABLE OF CONTENTS

01 Installation instruction

1.Installation Requirement 01

2.Installation 02

3.Testing 08

02 Troubleshooting and Maintenance

1.Troubleshooting 9

2.Note 10

01

Installation instruction

Installation Requirement

1、 The ground surface where the gate is installed should be level;

2、The concrete grade >= C30 (For outdoor installation);

3、Concrete thickness>=200mm;

4、The ground must be frost-free and have good bearing capacity;

5、The turnstile must be grounded;

6、The power cord should be no less than RVV3*2.0;

7、When installing, make sure the body is horizontal and the turning bar is vertical.

Installation

According to the channel requirements, place the equipment in good condition, ensuring that both ends of the equipment are level and the channel width is consistent

Mark the fixed hole position

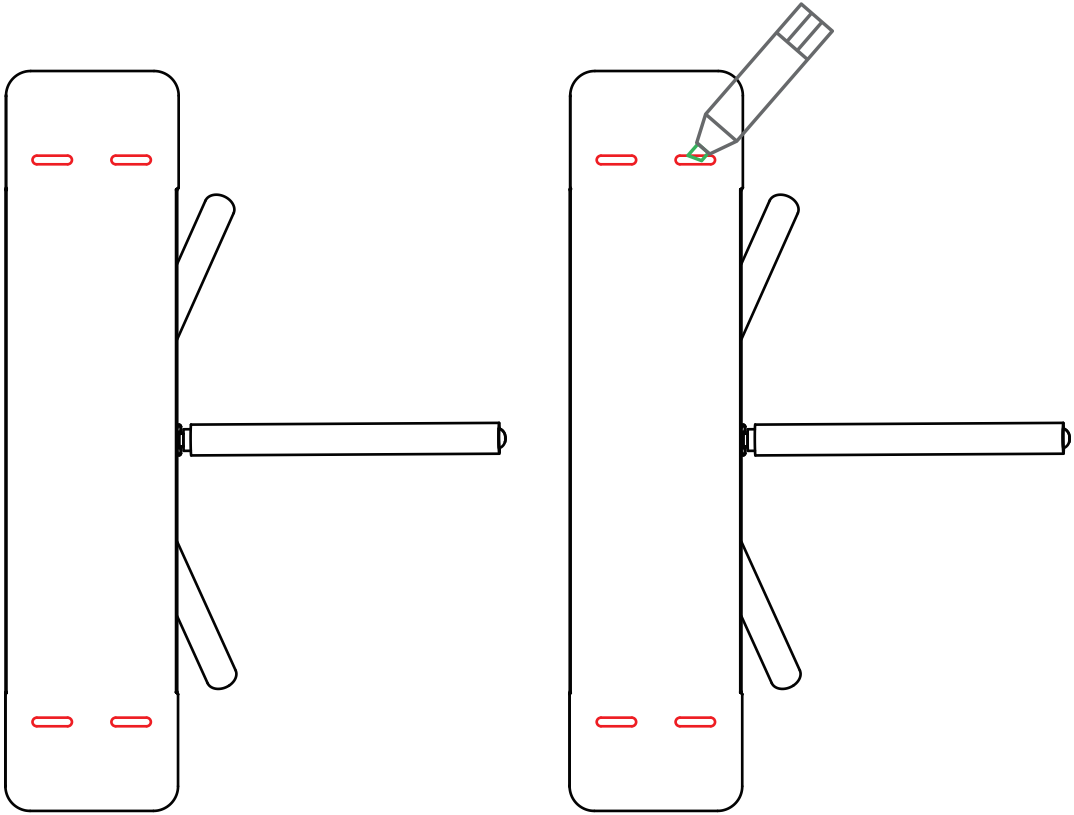

Move the device away and embed M12 * 100 expansion screws according tothe marked hole positions

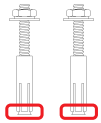

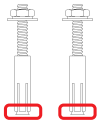

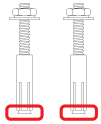

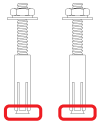

Buried wires according to wiring diagram ahead of time

(Note: This device only needs power cords. If other access control equipment is installed, wiring can be done according to actual conditions.)

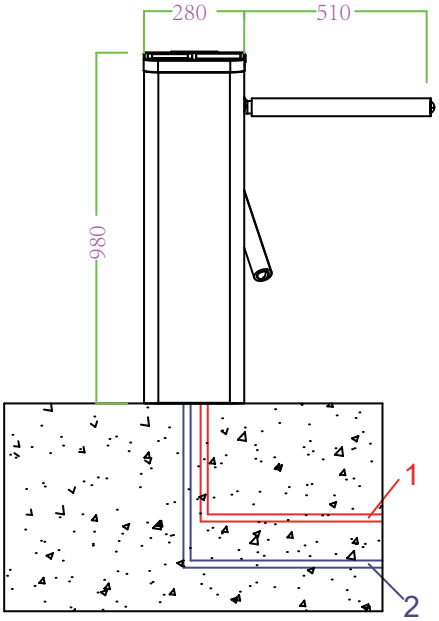

Installation Manual:

1 The Ø20mm PVC tube for AC 220V Power wires(3 X Ø2.0mm).

2 The tube for connecting vice-machine to master machine in the same lane (CAT5 network cables*2PCS, 2 * 0.5mm motor line*1PCS) .

3 TCP/IP ethernet cable for connecting access device to PC.

4 Control board .

5 Fixing the equipment with M12 X 90mm expansive bolt .

Mark:All wires extending out of the ground shall be no less than 2M.

Turnatile installation and fixation

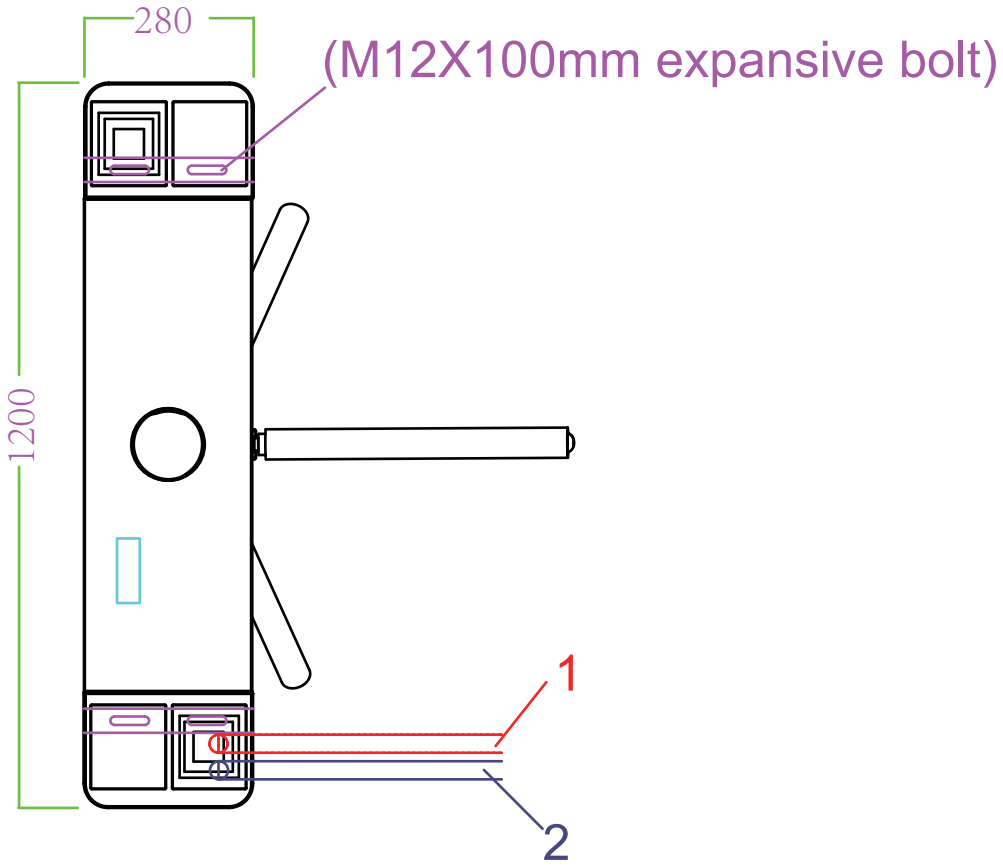

Wiring diagram

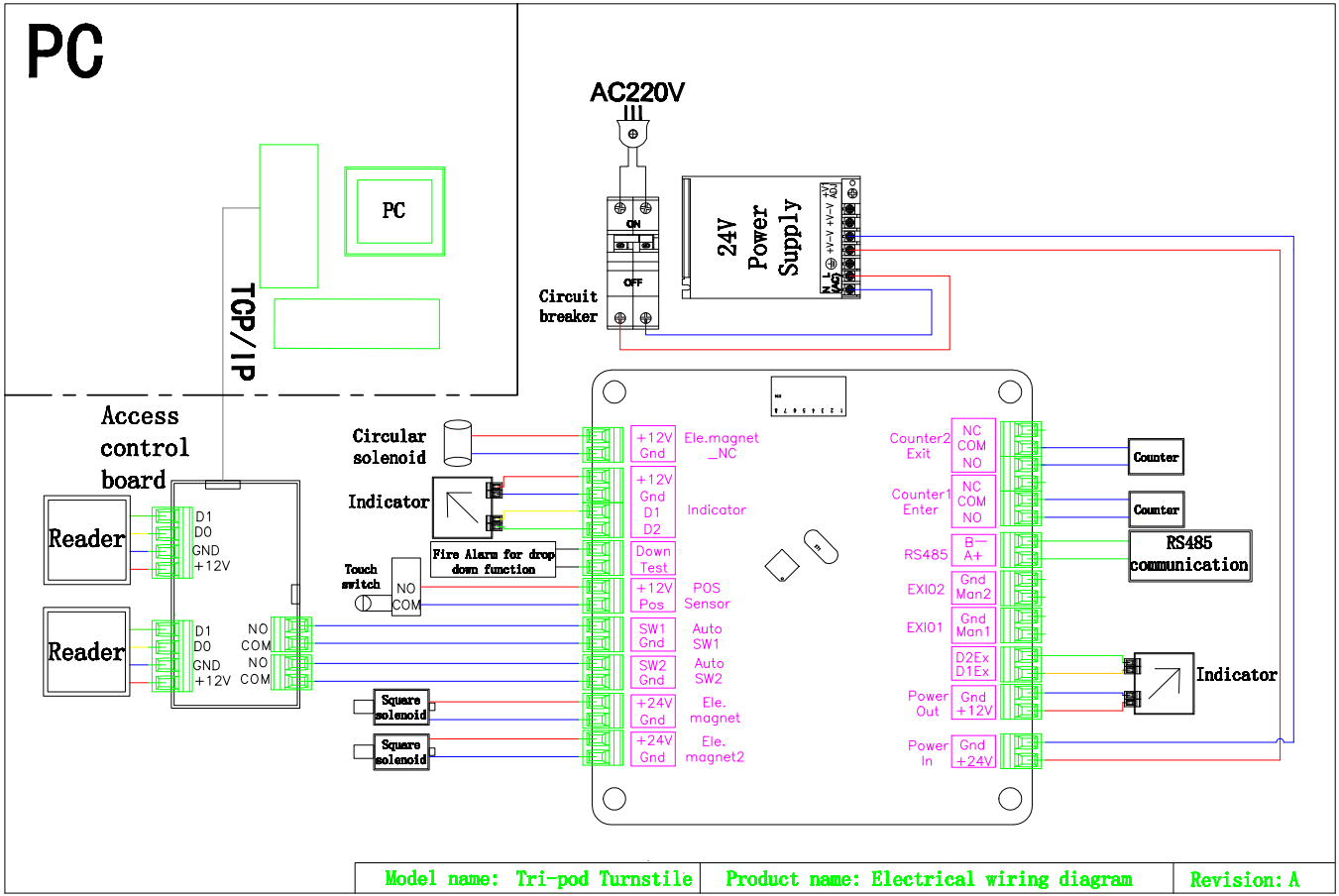

Testing

1、Check the wiring: Check the power cord is correctly connected according to the wiring diagram before turning on the power;

2、Set the access control relay unlocking time to 0s or 1s;

3、When a valid card is swiped, the indicator light turns into a green arrow, and the turnstile closes if no one passes within 5 s;

4、While swiping a valid card, the turnstile cannot be opened from the entry direction but the indicator light turns green on the opposite side , then swap the SW1 Gnd and SW2 Gnd terminals;

5、nly one person can pass through after swiping the card, and the gate rotates smoothly;

6、Control panel dial instructions:

Function setting					Dial code:ON indicate 1			Pass speed
8	7	6	5	4	3	2	1	Dial code
4、Factory reset: dial 4 to ON before powering on, and then dial 4 to OFF after powering on. 5、Led flowing light - light mode: (the default code: OFF) Set the light mode: dial 4 and 5 to ON before powering on, and then dial 4 to OFF after powering on. 6、Solenoid working mode: (default mode "ON": Solenoid power on when the turnstile is closed, power off when opening the turnstile) Change Solenoid working mode(Solenoid power off when the turnstile is closed, power on when opening the turnstile) : before turnstile powering on, dial 6 to OFF, and then power on again. 7、Limit switch working mode: (default code: ON) Set limit switch: before powering on, dial 7 to OFF, and then power on again. 8、Memory mode: (Default Code: OFF (No pass memory)) Set memory mode: Before powering on, dial 8 to ON ,and then power on again.(Most thing is group ticket)					0	0	0	5S
					0	0	1	6S
					0	1	0	7S
					0	1	1	8S
					1	0	0	9S
					1	0	1	10S
					1	1	0	11S
					1	1	1	12S

Memory mode means that all commands will be recorded and executed one one by one, for example: swipe a valid card five times, pass five people; non-memory mode means that the number of card swipes is not accumulated, for example: swipe a valid card five times, pass one person.

02

Troubleshooting and Maintenance

Troubleshooting

Question1: While swiping card, the turnstile cannot be opened from the entry direction but can be opened from the opposite direction ?

Solution: Swap the connection between SW1-Gnd and SW2-Gnd terminals of control board.

Question2: There is one indicator light with wrong direction?

Solution: Swap the connection between D1 and D2 terminals of control board.

Question3: While swiping card,the turnstile cannot be opened but the indicator light turns green ?

Solution: Short-circuit SW1 and GND, and then check if the solenoid opens. If it can not open, pls check if there is voltage output on the two connection between 24V and GNDs terminals, or check and replace the solenoid.

Question4: While no swiping card, turning bar can always turns?

Solution: After turning off the power, the turning bar still can be pushed and rotate : Pull the axis of the solenoid to check if it works smoothly. If not work smoothly, loosen the screws of the solenoid and readjust the solenoid position slightly, then fix the screws.

Question5: After swiping one card, locked after several turns（Default：After swiping one card, locked after one turn）?

Solution: After shorting SW1and GND terminals, the solenoid opens automatically. Then shorting the POS-12V terminals, if the solenoid dose not open, please replace the control board; if it opens immediately, please make the limit switch close to the cam (part of the movement)

Question6: After swiping card, the turning bar locks before pass completely.

Solution:
1. Increase the distance between the limit switch and the cam (part of the movement);
2. Increase the pass time slightly

Question7: It is difficult to push the turning bar after swiping the card?

Solution:
1. Check whether the bearing is rusted; if rusted, replace it.
2. Check whether the turning bar is installed vertically; if not, adjust it.

Question8: After swiping the card, just pull the turning bar back to turn normally?

Solution:
1. Check whether the turning bar is installed vertically. If not, please adjust.
2. Pull the axis of the solenoid to check if it works smoothly. If not work smoothly, loosen the screws of the solenoid and readjust the solenoid position slightly, then fix the screws.

Note

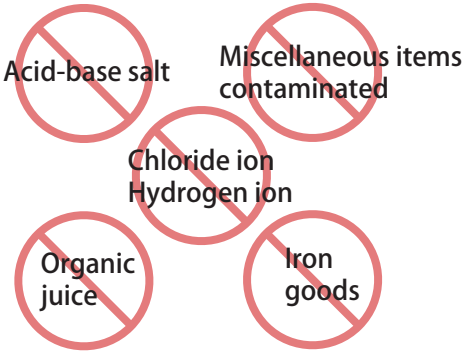

Why does 304 stainless steel rust?

Environmental factors can cause corrosion and rusting of stainless steel, especially the presence of hydrogen ions and chloride ions. For example, hydrogen ions and chloride ions are present in table salt/sweat/sea water/sea breeze/soil, etc. Stainless steel corrodes quickly in the presence of chloride ions, even more than ordinary low carbon steel. Therefore, there are requirements for the working environment of stainless steel, and it needs to be wiped frequently to remove dust and keep clean and dry.

Stainless Steel Turnstile Maintenance Manual

Dear Customer ,

Hello! Thank you for purchasing our company's products. Our company solemnly promises to customers that the pedestrian turnstile products you purchase are all made of high-end stainless steel 304. The sophisticated production technology is applied thoroughly all production process. With strict quality inspection, the product quality is assured. Affected by improper operation and climate environment, various components will inevitably become worn and cracked, resulting in rust and poor customer experiences. Therefore, we recommend that you give your products regular maintenance and keep your products new.

Type: Surface dust, chemical liquid, dirt and acid and alkaline substances

Solutions: Wash with wet soft non-woven cloth, then wipe clean, then scrub with alcohol, and then wipe the whole body of the turnstile with WD-40 rust remover;

Maintenance cycle: Weekly

Type: The surface has rainbow patterns or the surface color is dull

Solutions: Wash with wet soft cotton cloth, then wipe clean, then scrub with alcohol, and then wipe the whole body of the turnstile with WD-40 rust remover;

Maintenance cycle: Weekly

Type: Check the moving parts for abnormal noise or looseness

Solutions: Apply butter to the moving part

Maintenance cycle: Quarterly

Type: Check if fasteners are loose or not and circuits is abnormal or not

Solutions: If the fastener is loose, then fasten. If the circuit is abnormal, eliminate the problems.

Maintenance cycle: Annual

Maintenance tools and materials

1、Cleaner: Choose mild stainless steel cleaners and avoid using cleaners with acidic or alkaline ingredients.

2、Soft cloth or sponge: Spray cleaners on a soft cloth （or sponge） to clean the turnstile surface.

3、Water: wash surface dirt.

4、Drying cloth: wipe off surface moisture.

5、WD-40 Rust Remover: Remove rust caused by long-term exposure to corrosive environment.

6、 Lubrication: lubricate bearings, locking arms, transmission joint components.

Note：

1、 Avoid using cleaners with acidic or alkaline ingredients, which may make the surface rust.

2、Avoid using sharp or hard objects to scratch the turnstile surface, which will affect the appearance of the turnstile surface.

3、Keep surface dry,Avoid making the turnstile in moisture for a long time. Water stains will cause stainless steel to rust. If there are water stains on the surface, wipe clean immediately.

4、Regular inspection and maintenance,regularly check the turnstile surface condition to promptly find and resolve existing problems. If there are rust or scratches on the surface, please maintain or replace in time.